GIMMARP

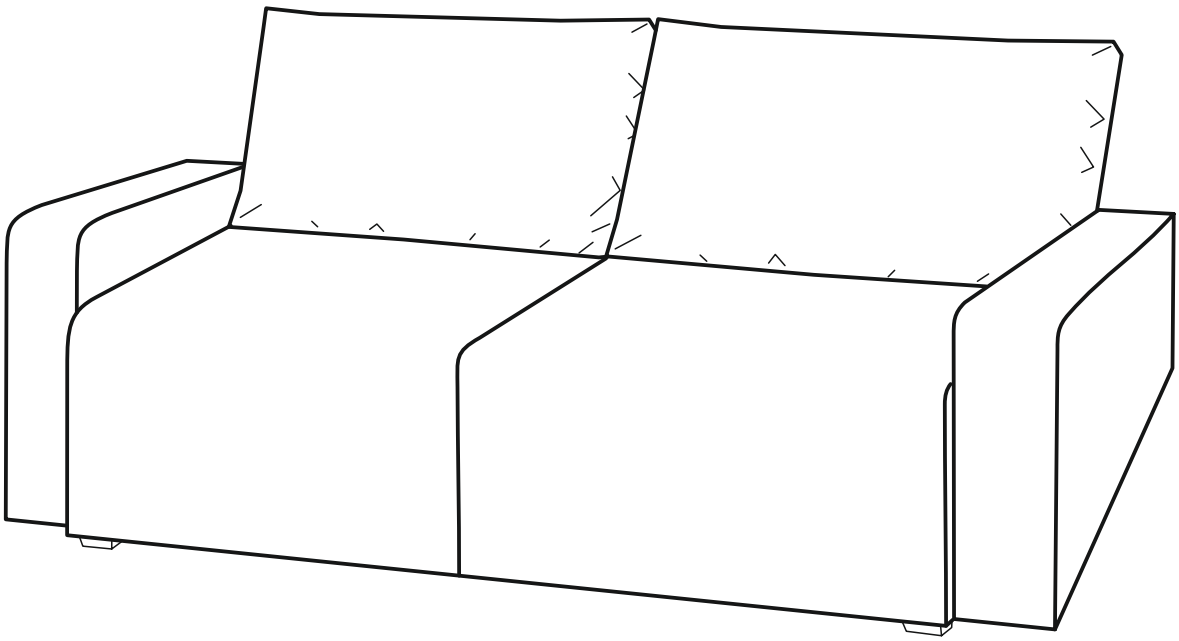

Design and Quality
IKEA of Sweden

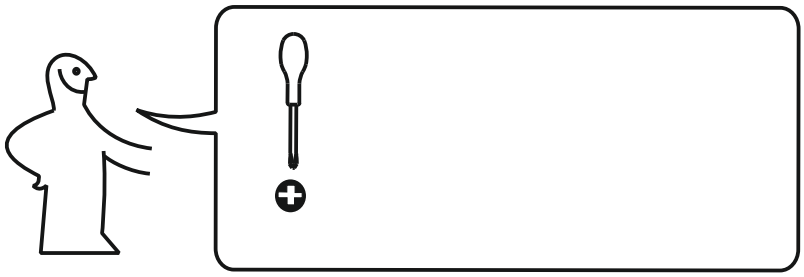

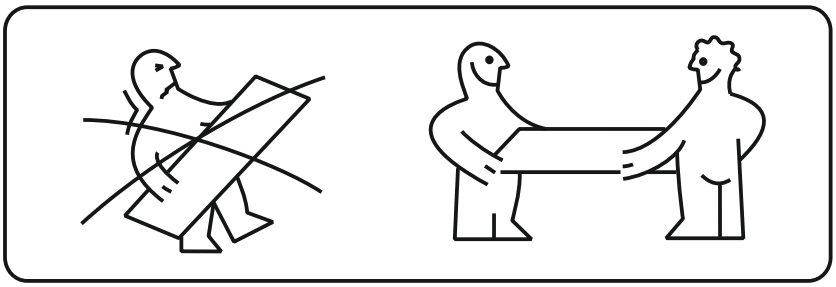

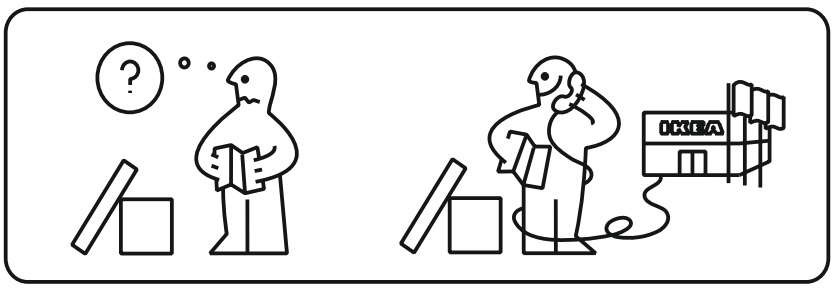

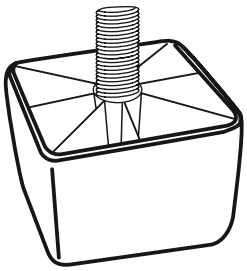

7x

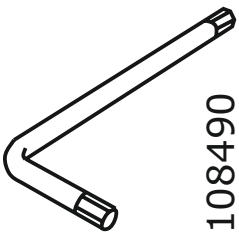

1x

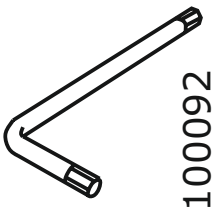

1x

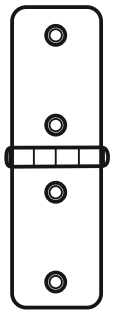

3x

4x

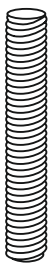

4x

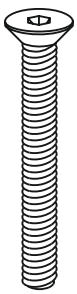

12x

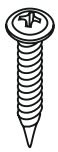

2x

1

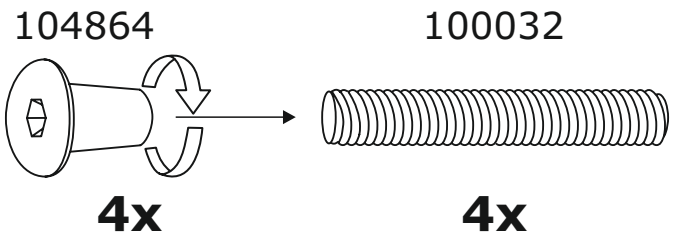

2

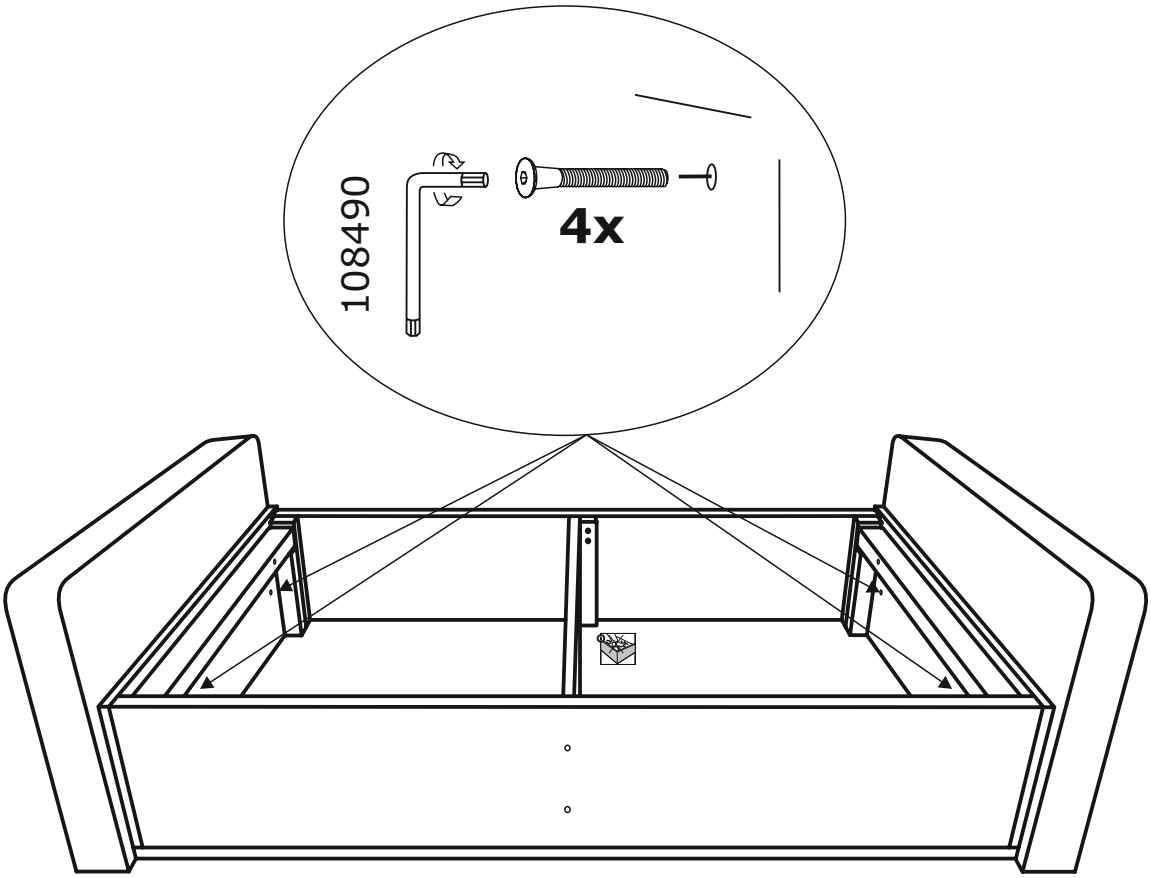

3

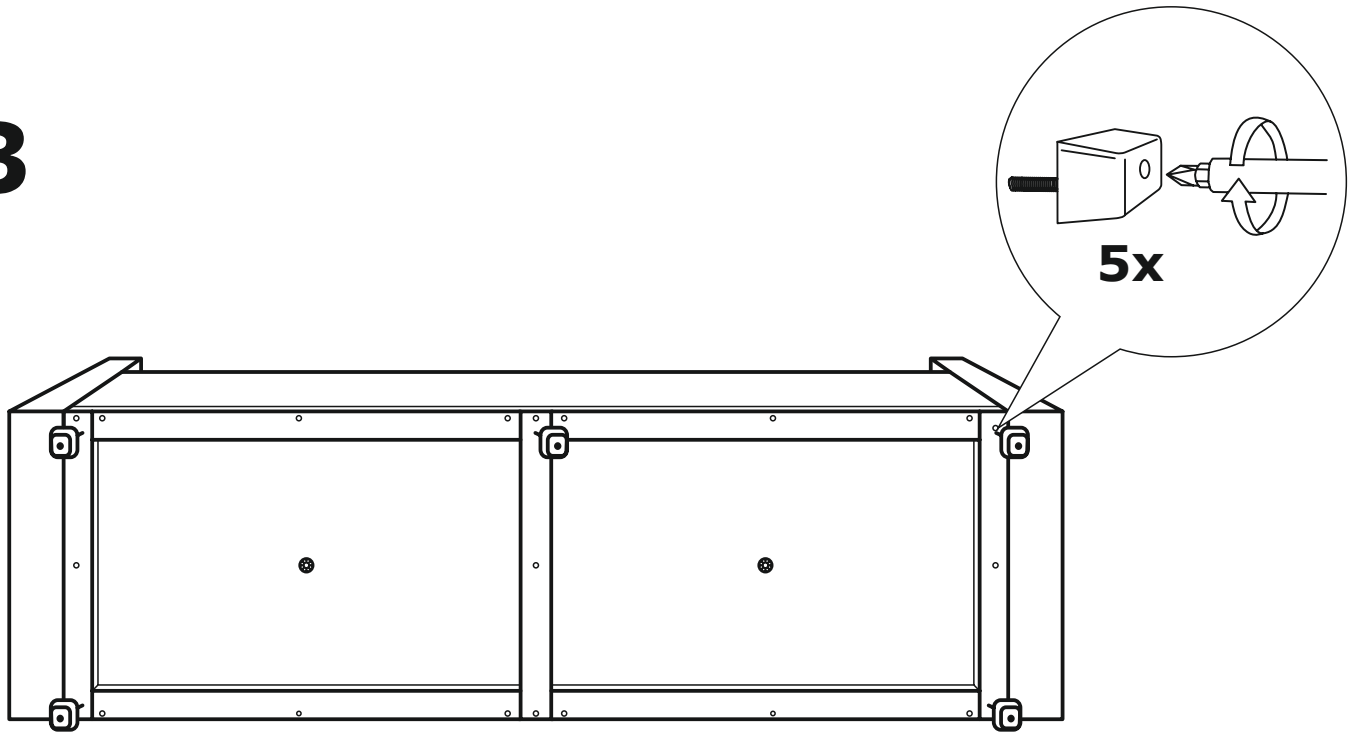

4

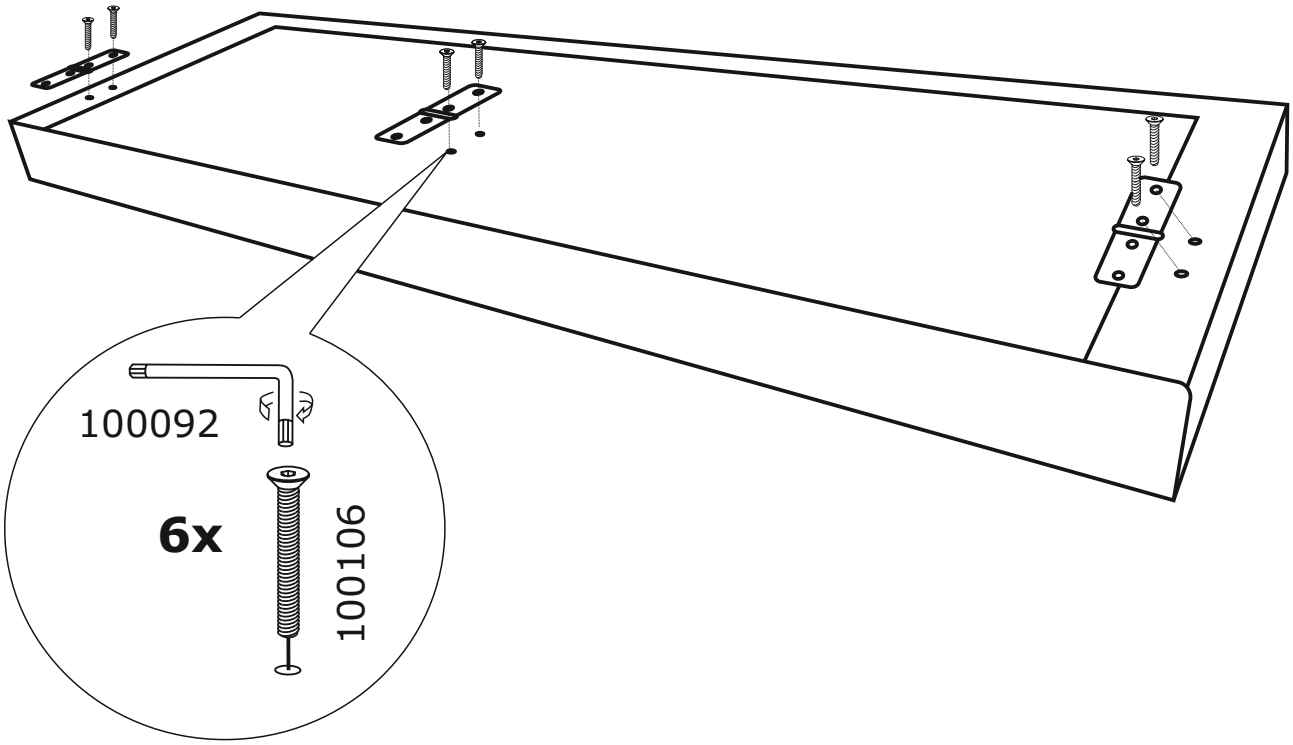

5

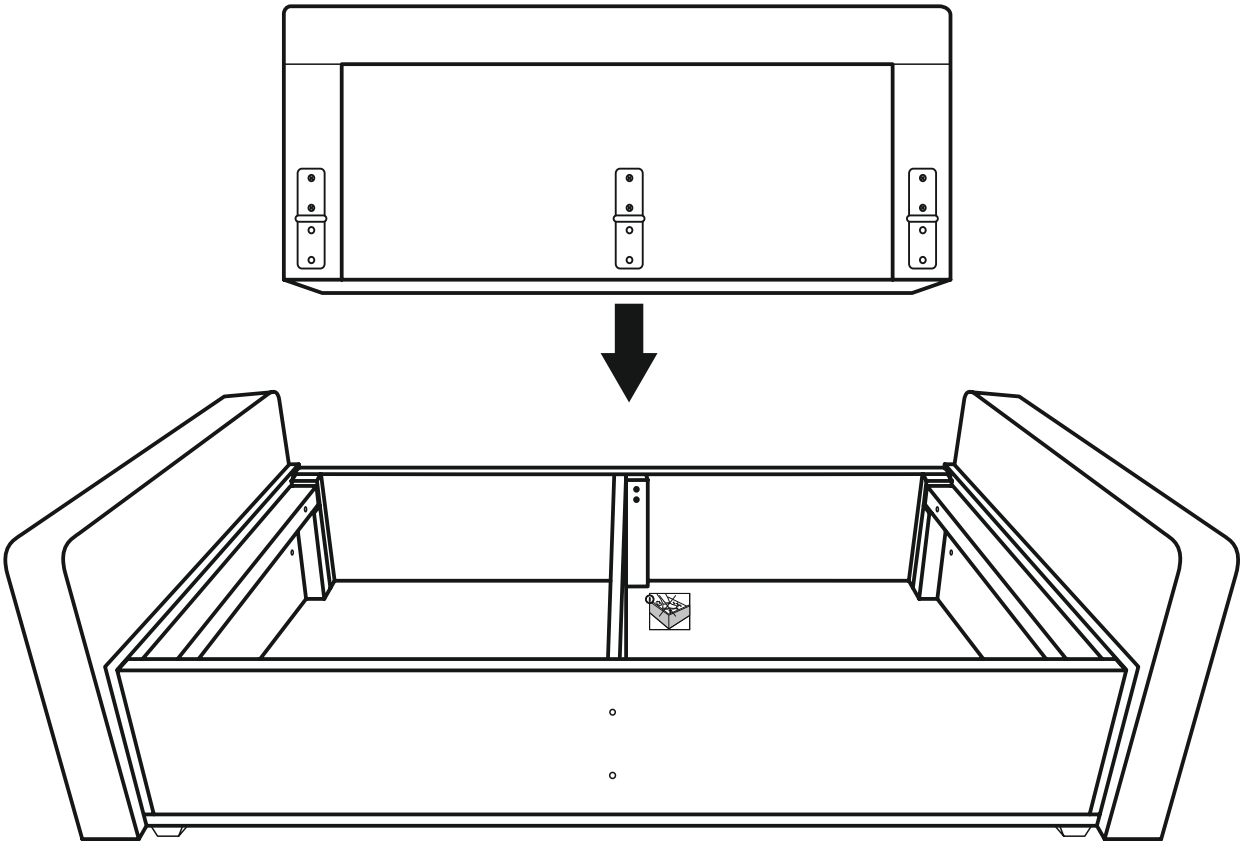

6

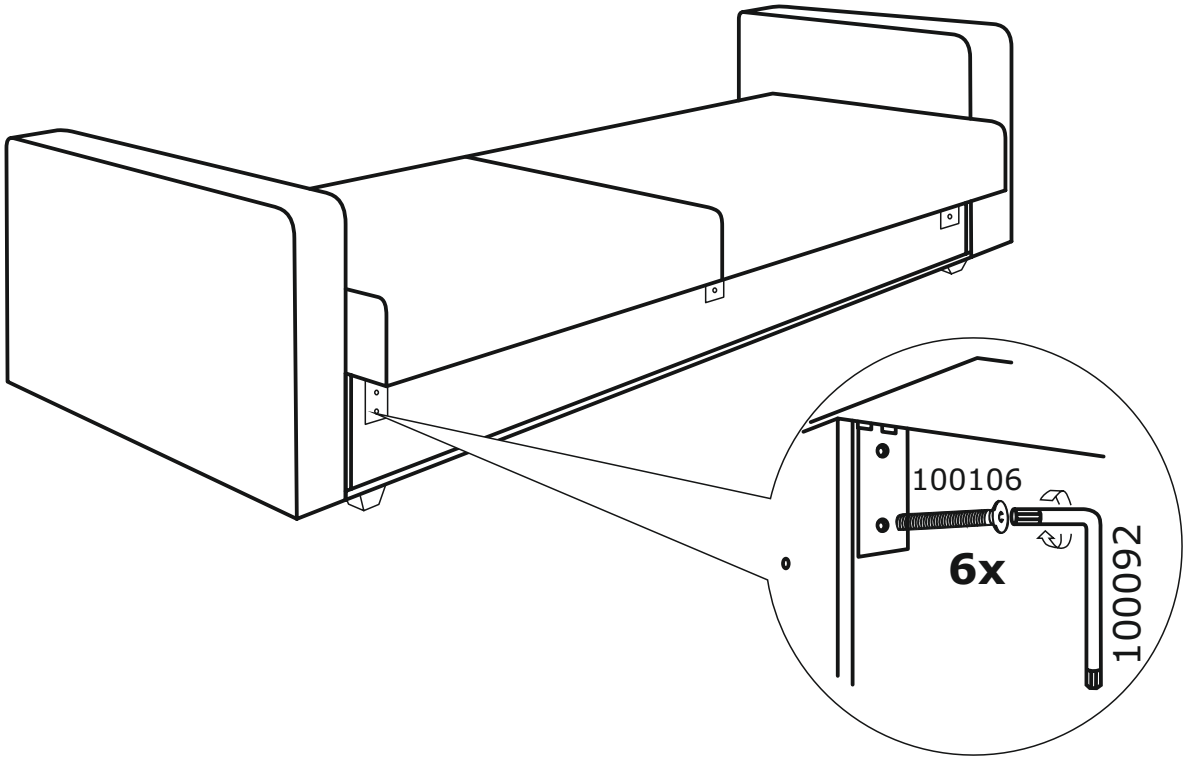

7

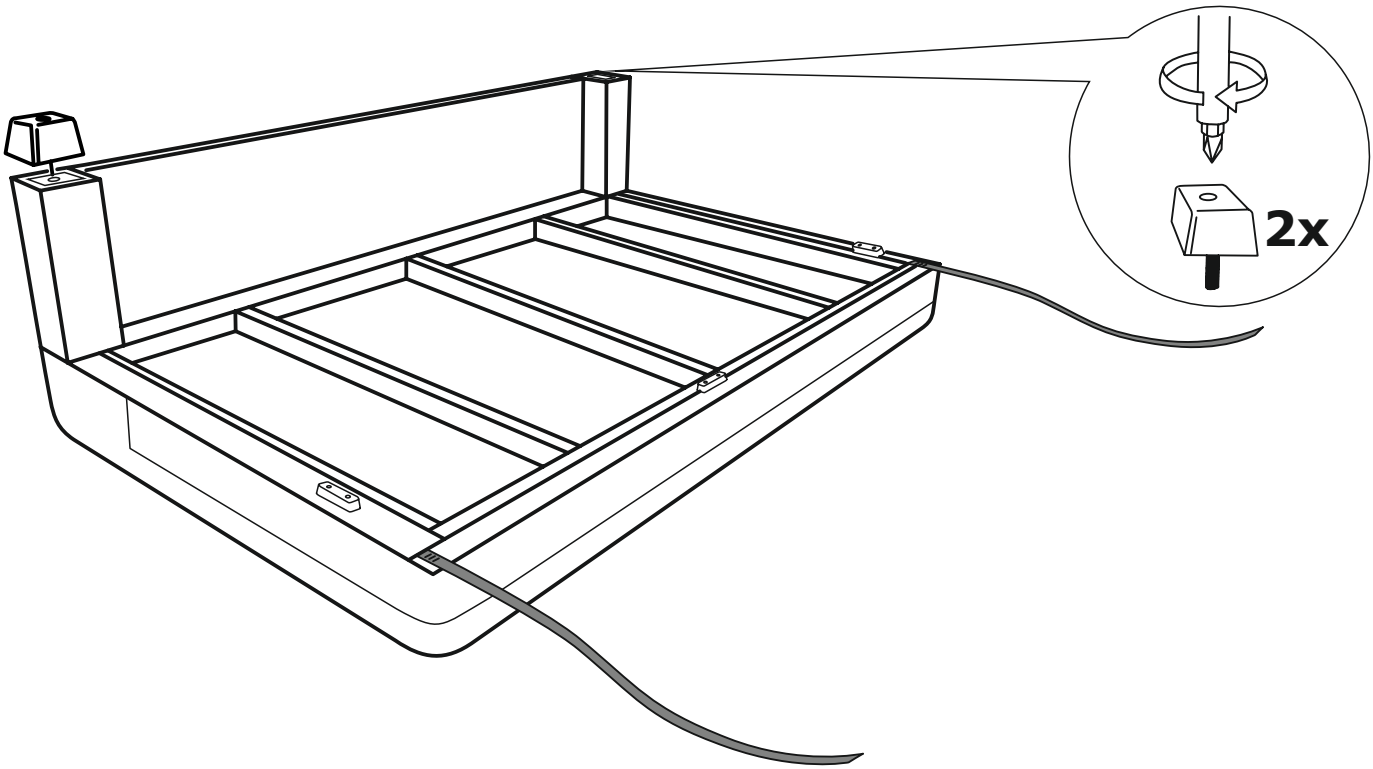

8

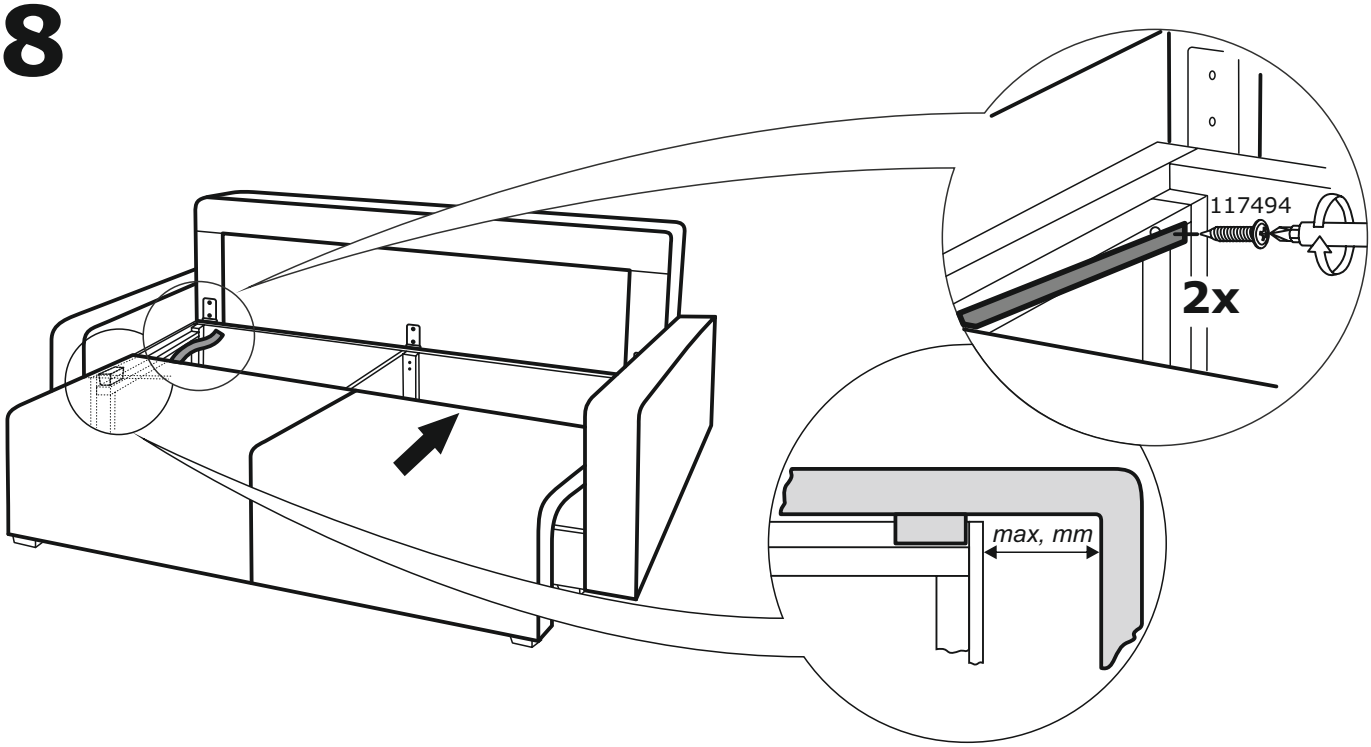

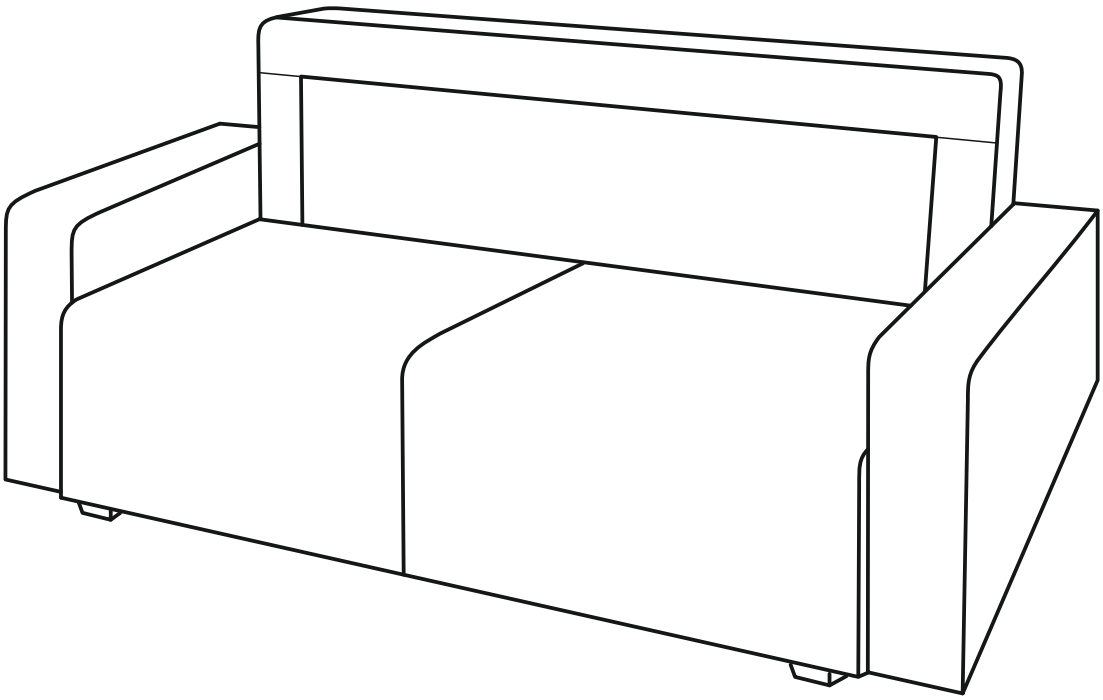

9

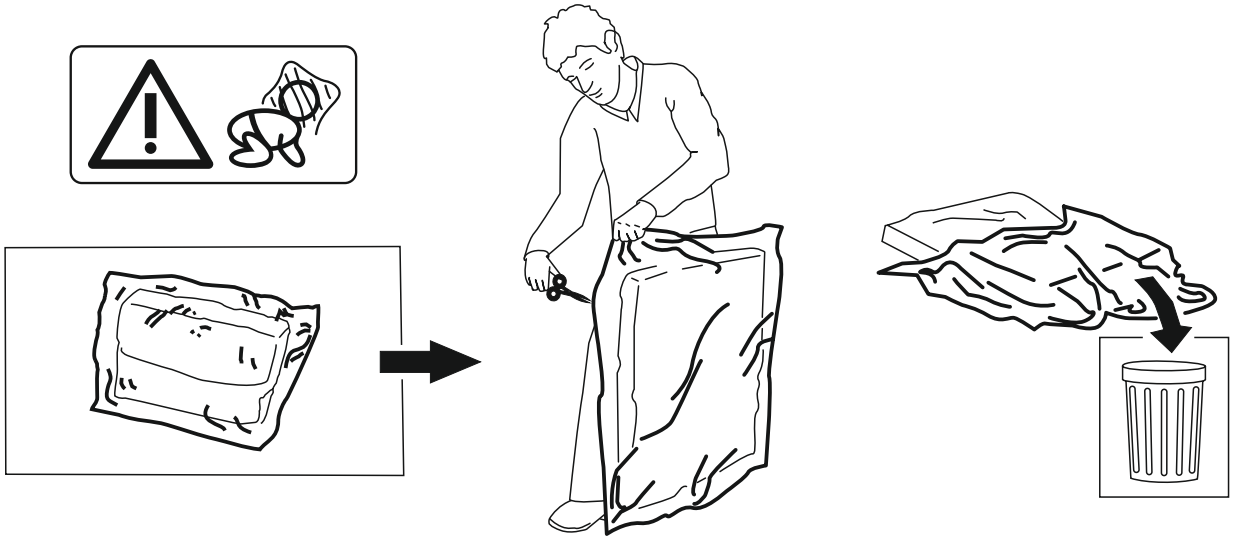

10

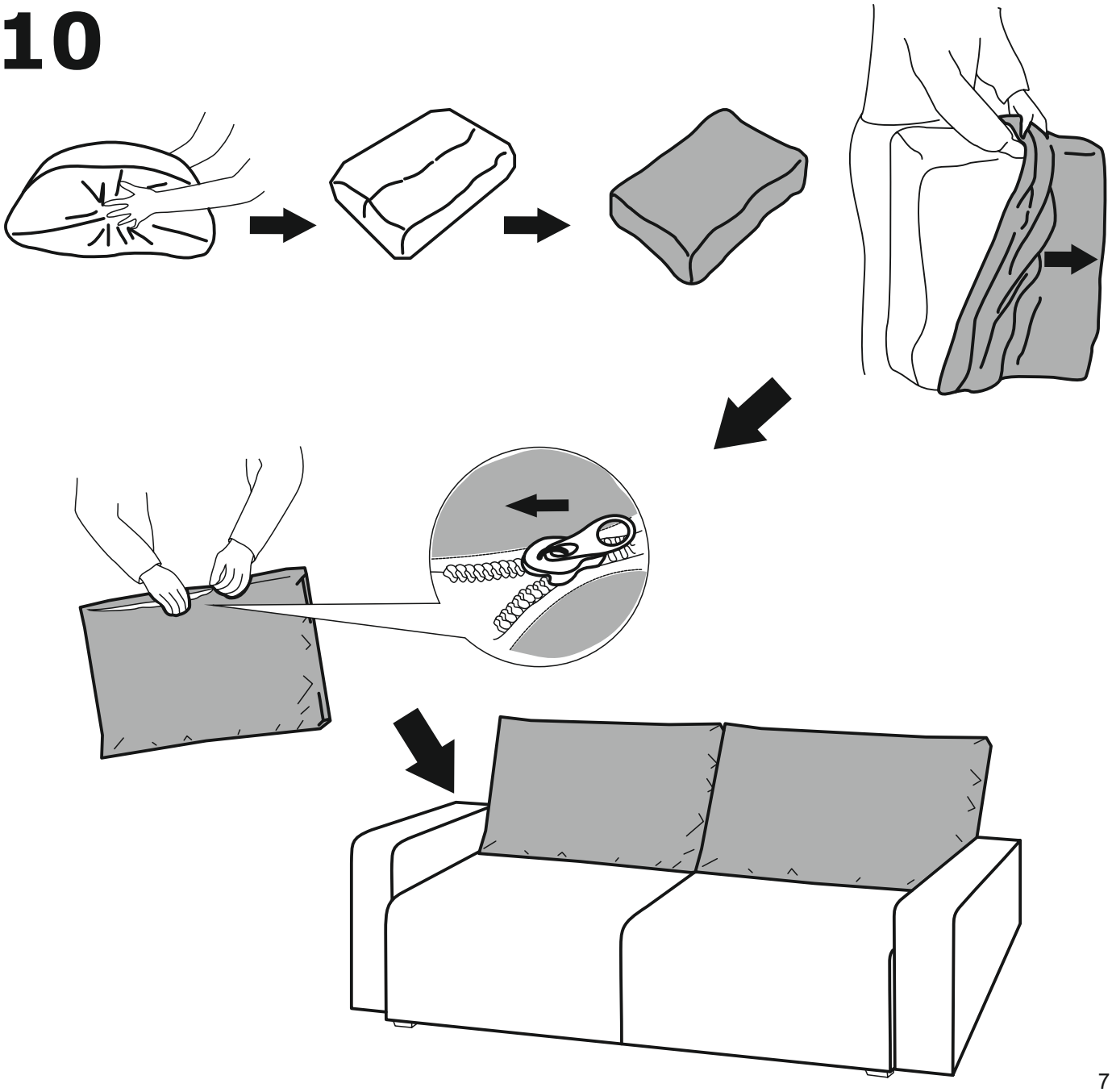

11

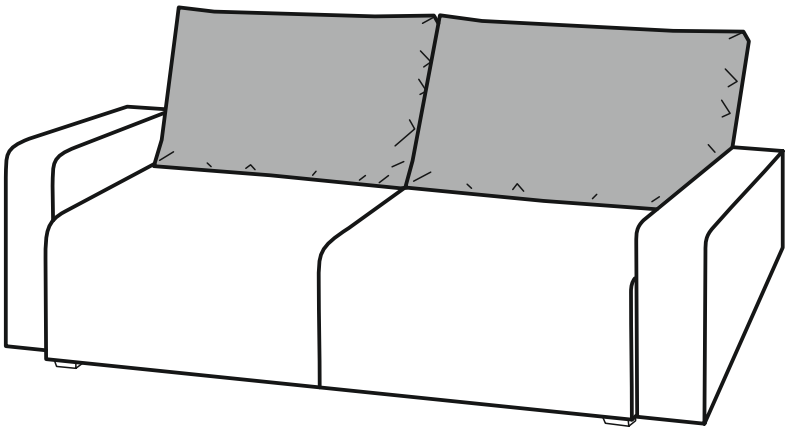

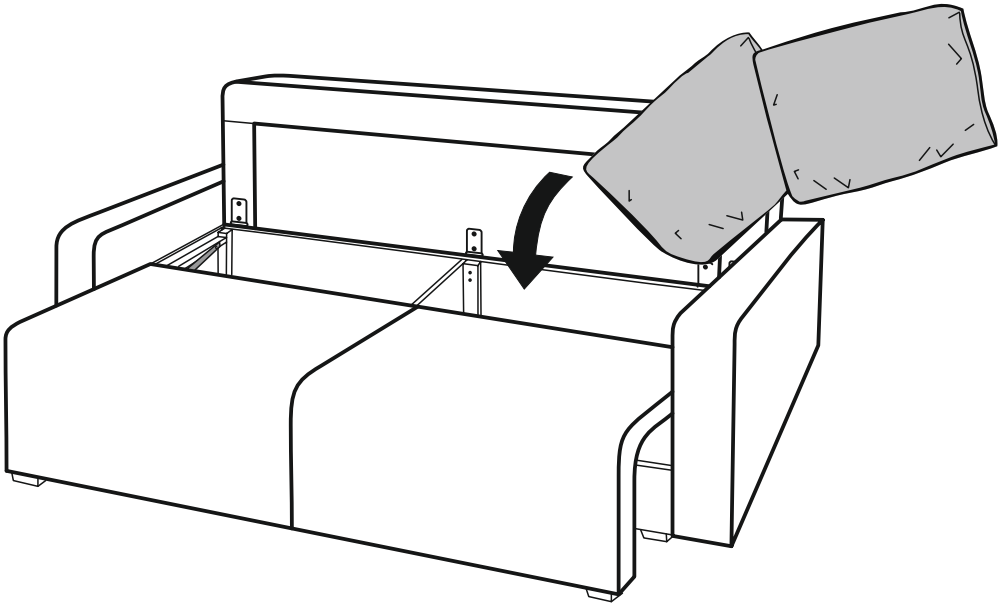

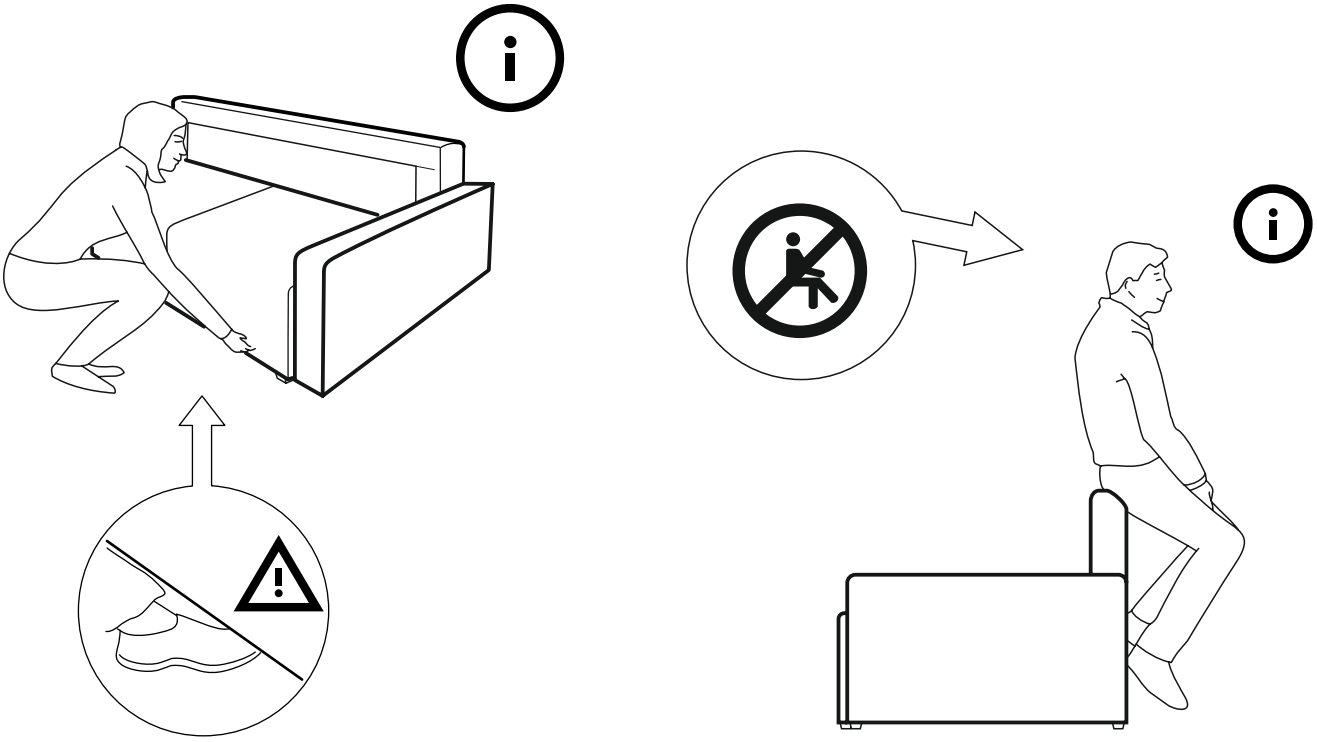

12

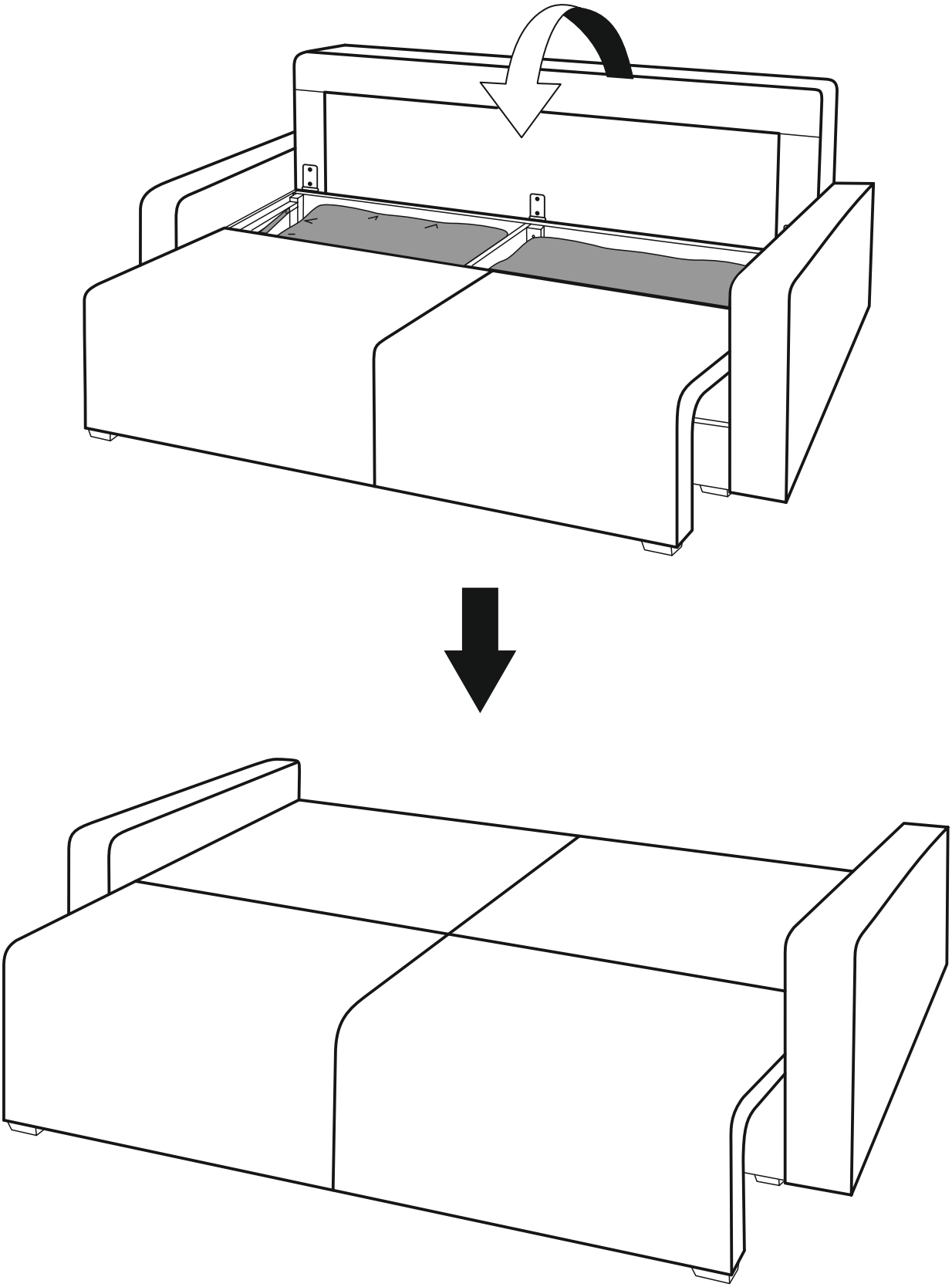

© Inter IKEA Systems B.V. 2007